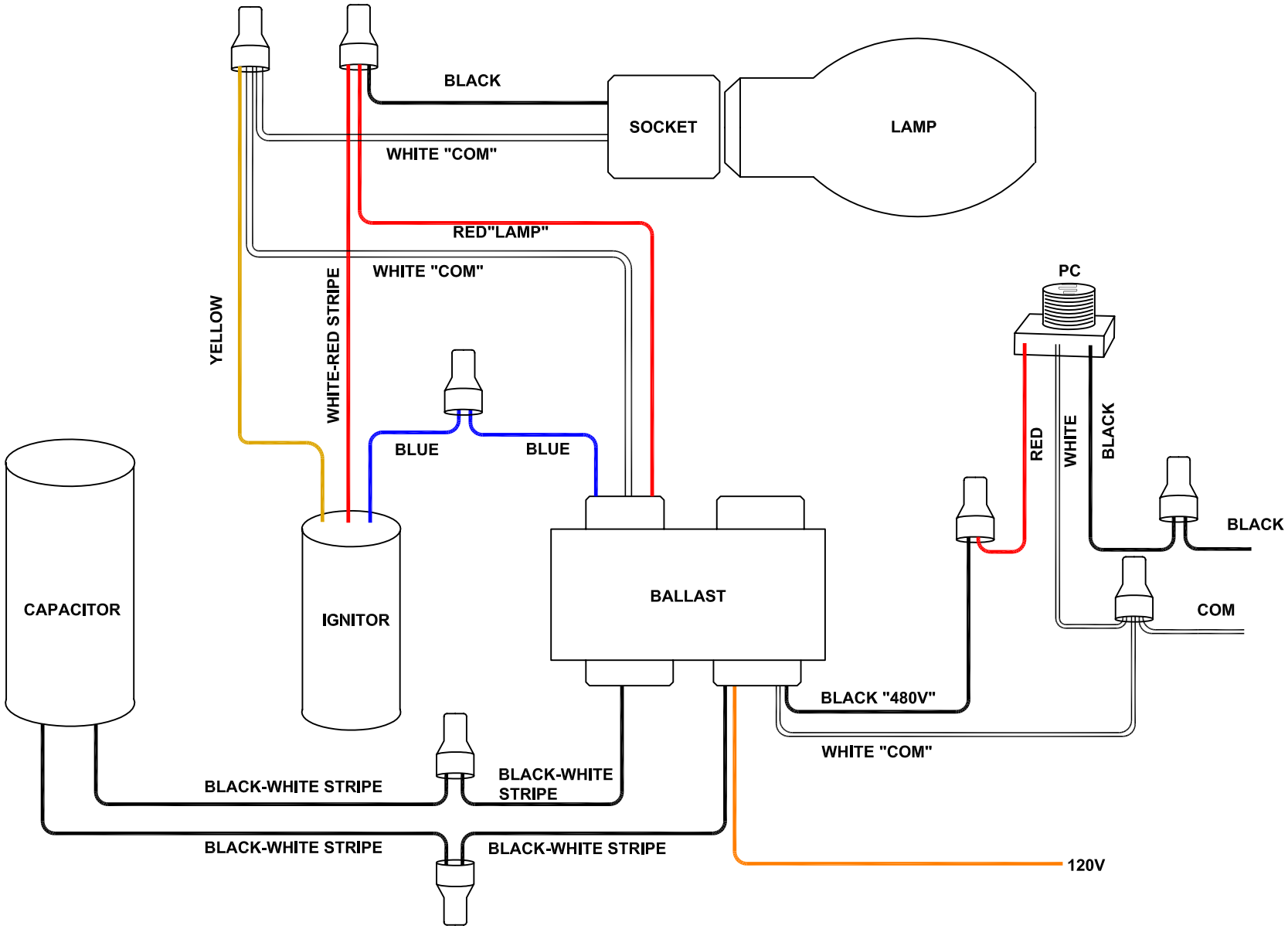

RAB LIGHTING, INC.

THIS DRAWING AND THE INFORMATION IT DISCLOSES IS THE EXCLUSIVE PROPERTY OF RAB LIGHTING, INC.
ANY REPRODUCTION OR USE OF THIS DRAWING WITHOUT THE WRITTEN CONSENT OF RAB ELECTRIC MFG CO. IS STRICLY PROHIBITED.

HPS 250W 480V + PC VENTURE WIRING DIAGRAM TITLE	LMC DRAWN BY	11.9.05 DATE	REVISION	REVISION DATE
	PART NO:	HPS 250W 480V + PC VEN DWG No:		